INTRODUCTION

This manual is intended as a reference for the installation and service of a Scotsman ice maker model CME865R or CME1002R.

This model is a remote condenser cuber, 30" wide and should be connected to a Scotsman remote condenser.

Table of Contents

INTRODUCTION . . . . . Page 1
PRE-INSTALLATION INFORMATION . . . . . Page 2
ICE MACHINE SPECIFICATIONS . . . . . Page 3
RCE1001 SPECIFICATIONS . . . . . Page 4
FOR THE INSTALLER: Environmental Limitations . . . . . Page 5
FOR THE INSTALLER: Machine & Bin Assembly . . . . . Page 6
FOR THE PLUMBER . . . . . Page 7
FOR THE INSTALLER: Remote Condenser . . . . . Page 8
FOR THE INSTALLER: Coupling Instructions . . . . . Page 9
FOR THE ELECTRICIAN: Electrical Connections . . . . . Page 10
FOR THE INSTALLER: Final Check List . . . . . Page 11
INITIAL START UP . . . . . Page 12
ADJUSTMENTS . . . . . Page 14
COMPONENT DESCRIPTION . . . . . Page 15
SERVICE SPECIFICATIONS: CME865R . . . . . Page 18
SERVICE SPECIFICATIONS: CME1002R . . . . . Page 19
CLEANING & SANITIZING . . . . . Page 20
CLEANING . . . . . Page 21
FREEZING CYCLE OPERATION . . . . . Page 22
HARVEST CYCLE - HOT GAS BYPASS . . . . . Page 23
SERVICE DIAGNOSIS . . . . . Page 24
SERVICE DIAGNOSIS: Ice Level Control Circuit . . . . . Page 26
REMOVAL AND REPLACEMENT . . . . . Page 27
REFRIGERATION SERVICE . . . . . Page 31
LIQUID CHARGING . . . . . Page 32

Parts lists and wiring diagrams are in the center of this manual, printed on yellow paper.

This manual was printed on recycled paper.
This manual contains information on maintenance and service. Keep it for future reference.

Note this symbol where it appears.

⚠WARNING

It marks a potential hazard.

CME865R & CME1002R

PRE-INSTALLATION INFORMATION

These two models are modular ice cube machines that are designed to be connected to a remote condenser.

The remote condenser coil must be of adequate size and must NOT have been used with a mineral oil refrigeration system. Specific Scotsman remote condensers are recommended.

A stacking kit (KSCMS) is required for stacking these ice machines. It interconnects the sonor bin ice level controls. A CME865 or CME1002 may **only** be stacked onto models CME865, CME1002, MCM860, MCM1062 or CMS1002.

These models will fit any 30" wide Scotsman bin, such as the BH550 or HTB555, without a bin top. Other bins require a bin top.

Note: The sonar transducer, located in the base of the machine, must NOT be covered by installation material (such as a non-Scotsman bin top). The transducer must have clear access to the ice to be able to sense the ice level. See page 5 for location.

Model Number	Dimensions W" x D" x H"	Basic Electrical	Min Circuit Ampacity	Max Fuse Size	Refrigerant Charge* (R-404A)
CME865RE-32A	30 x 24 x 27	208-230/60/1	16.5	20	336 oz.
CME865RE-6A	30 x 24 x 27	230/50/1	-	-	336 oz.
CME1002RE-32A	30 x 24 x 27	208-230/60/1	20.5	20	336 oz.
CME1002RE-3A	30 x 24 x 27	208-230/60/3	14.3	15	336 oz.
CME1002RE-6A	30 x 24 x 27	230/50/1	-	-	336 oz.

* This number is for recharging purposes only. - Note: Beginning June 1996, 48 ounces of charge were added to the ERC301, before that total charge was 288 oz.

Use Scotsman Remote Condenser

- RCE1001 (single circuit) or ERC301 (single circuit).

Use precharged tubing kit

- RTE25 (25')
- RTE40 (40')
- RTE75 (75')

	Air Temperature (cabinet)	Remote Condenser Air Temperature	Voltage	Water Temperature
Minimum	50^0 F.	-20^0 F.	-5%	40^0 F.
Maximum	100^0 F.	120^0 F.	+10%	100^0 F.

ICE MACHINE SPECIFICATIONS

Always refer to the nameplate, located on the back of the cabinet, for the:

- model number,
- serial number,
- basic electrical requirements,
- minimum circuit ampacity,
- maximum fuse size,
- and refrigerant charge.

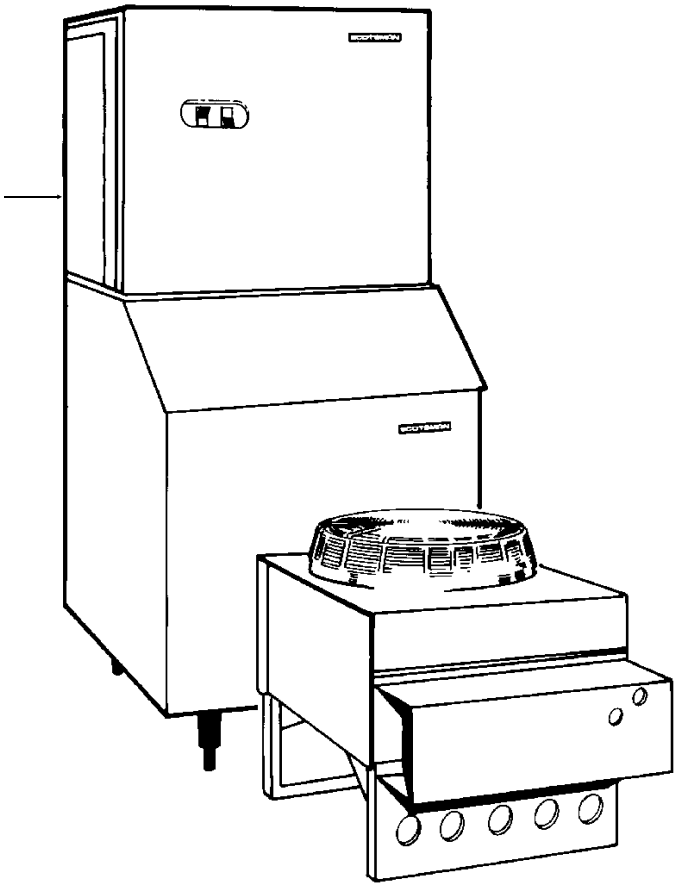

A serial number plate with the model number, serial number and refrigerant charge is located behind the front panel, below the control box.

The unit comes from the factory with the correct refrigerant charge contained in the receiver. The refrigerant charge information is for recharging, should that be necessary.

All utility connections and refrigerant line connections are made at the back of the ice maker.

Before beginning installation, be sure that all of the components necessary for complete assembly of the ice system are available, and are the correct components with regard to model, voltage, and finish.

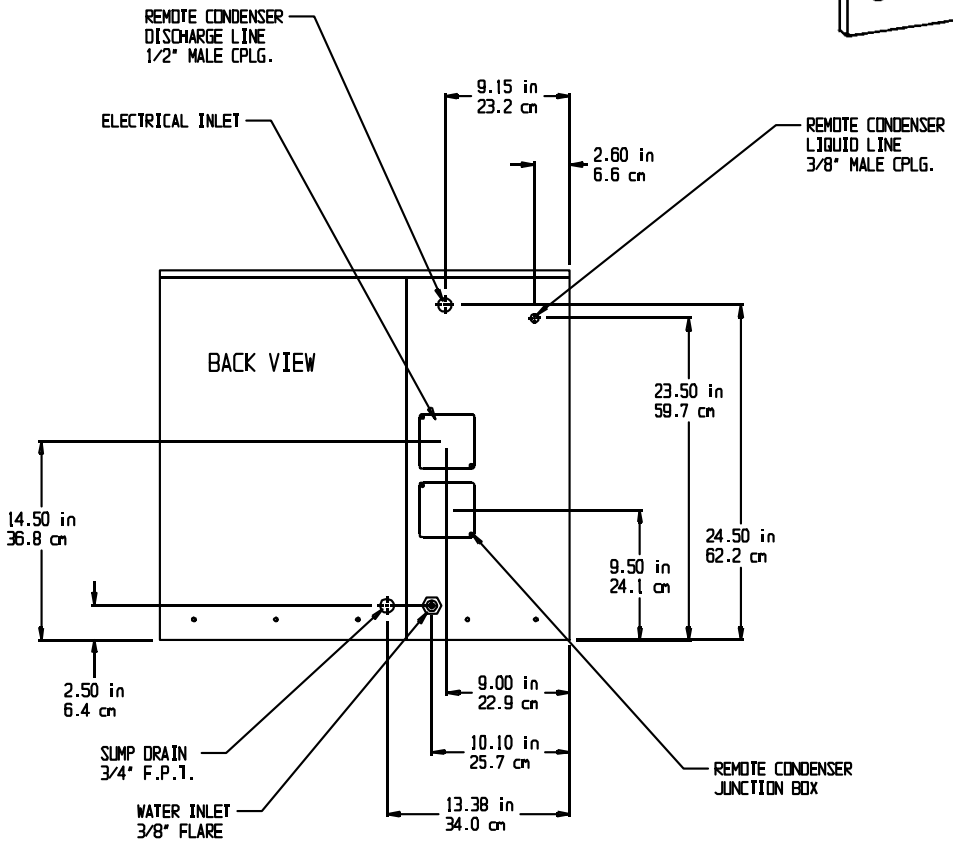

FOR THE INSTALLER: Environmental Limitations

Installation Limitations

The ice making portion of this ice system is designed to be installed **indoors**, in a controlled environment.

	Minimum	Maximum
Air Temp	50^0F.	100^0F.
Water Temp	40^0F.	100^0F.
Water Pressure	20 PSI	80 PSI
Voltage	197	253

Operating the ice machine outside of the above limitations, or outdoors, is potentially damaging to the machine; also it is misuse of the machine, which may void the warranty.

Scotsman Ice Systems are designed and manufactured with the highest regard for safety and performance. They meet or exceed the standards of UL, NSF, and CSA.

Scotsman assumes no liability or responsibility of any kind for products manufactured by Scotsman that have been altered in any way, including the use of any part and/or other components not specifically approved by Scotsman.

Scotsman reserves the right to make design changes and/or improvements at any time.

Specifications and design are subject to change without notice.

Water Limitations

An ice machine is a food manufacturing plant; it takes a raw material, water, and turns it into a food product, ice. The purity of the water is very important in obtaining pure ice and in maximizing product life. These general recommendations should help keep the ice maker clean:

1. Filter the water used to produce ice. Water filters vary greatly in ability and function. Install one that filters out suspended solids to a dimension of 5 microns or smaller. The finer the filter the better, but finer filters will clog sooner than course ones. It may be necessary to add a course filter ahead of the fine filter to prolong filter life.

2. Check with a water treatment specialist for a water test, and recommendations regarding filters and treatment.

Service Limitations

Some space on the sides, the back and the top should be allowed for service and utility connections.

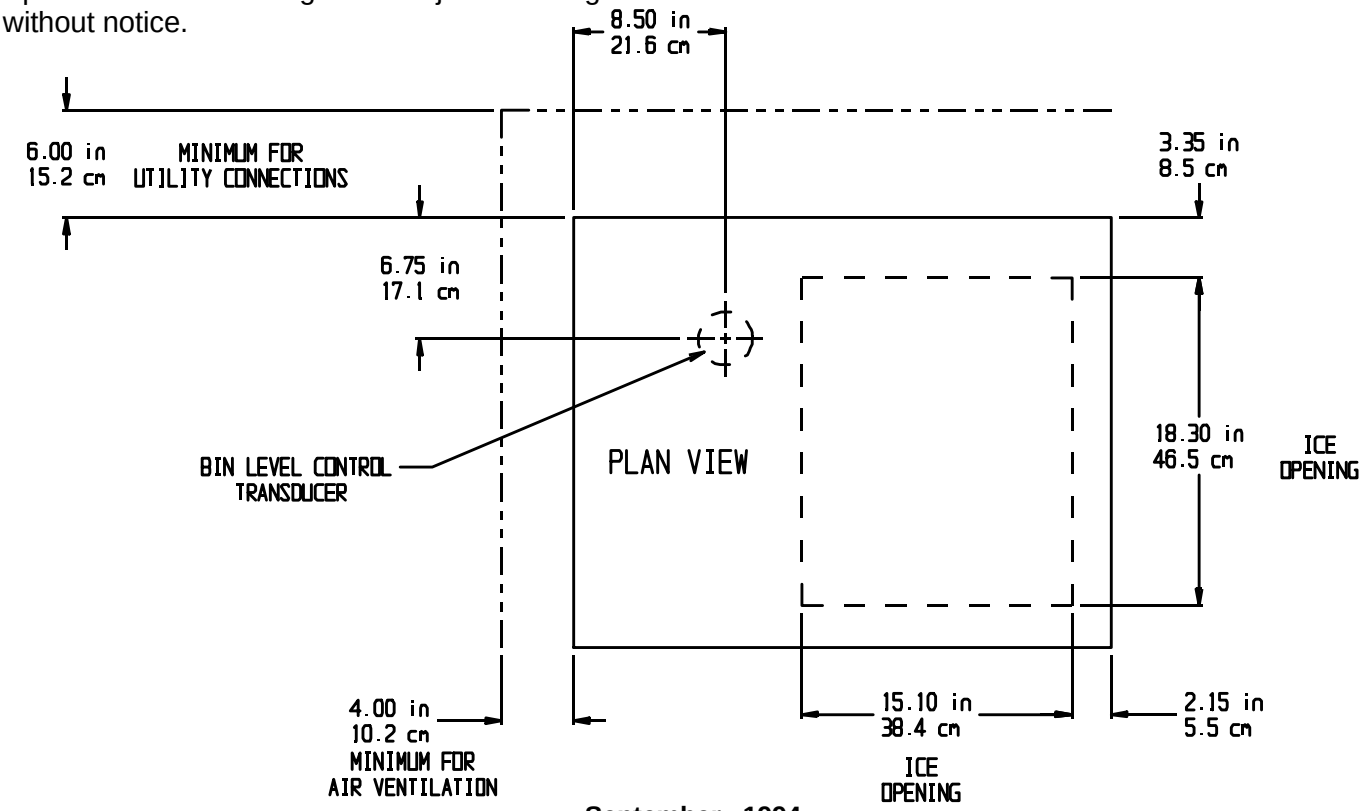

FOR THE PLUMBER

Water Supply

The recommended water supply line is a 3/8-inch O.D. tubing with a minimum operating pressure of 20 PSIG and a maximum of 80 PSIG.

Connect to cold water supply line with standard plumbing fittings, with shut off valve installed in an accessible place between the water supply and the cuber. In some cases a plumber will be required.

Drain Connections:

All drains are gravity type and must have a minimum of 1/4 inch per foot fall on horizontal runs.

The drains to be installed must conform with the local plumbing codes. Use only 3/4" rigid tubing. The ice machine's drain must be separate from the bin's drain. Both use 3/4" FPT fittings. Insulation of the bin drain is recommended.

Install a vertical open vent on the drain line(s) high point to ensure proper draining. The ideal drain receptacle is a trapped and vented floor drain.

CONFORM TO ALL LOCAL CODES.

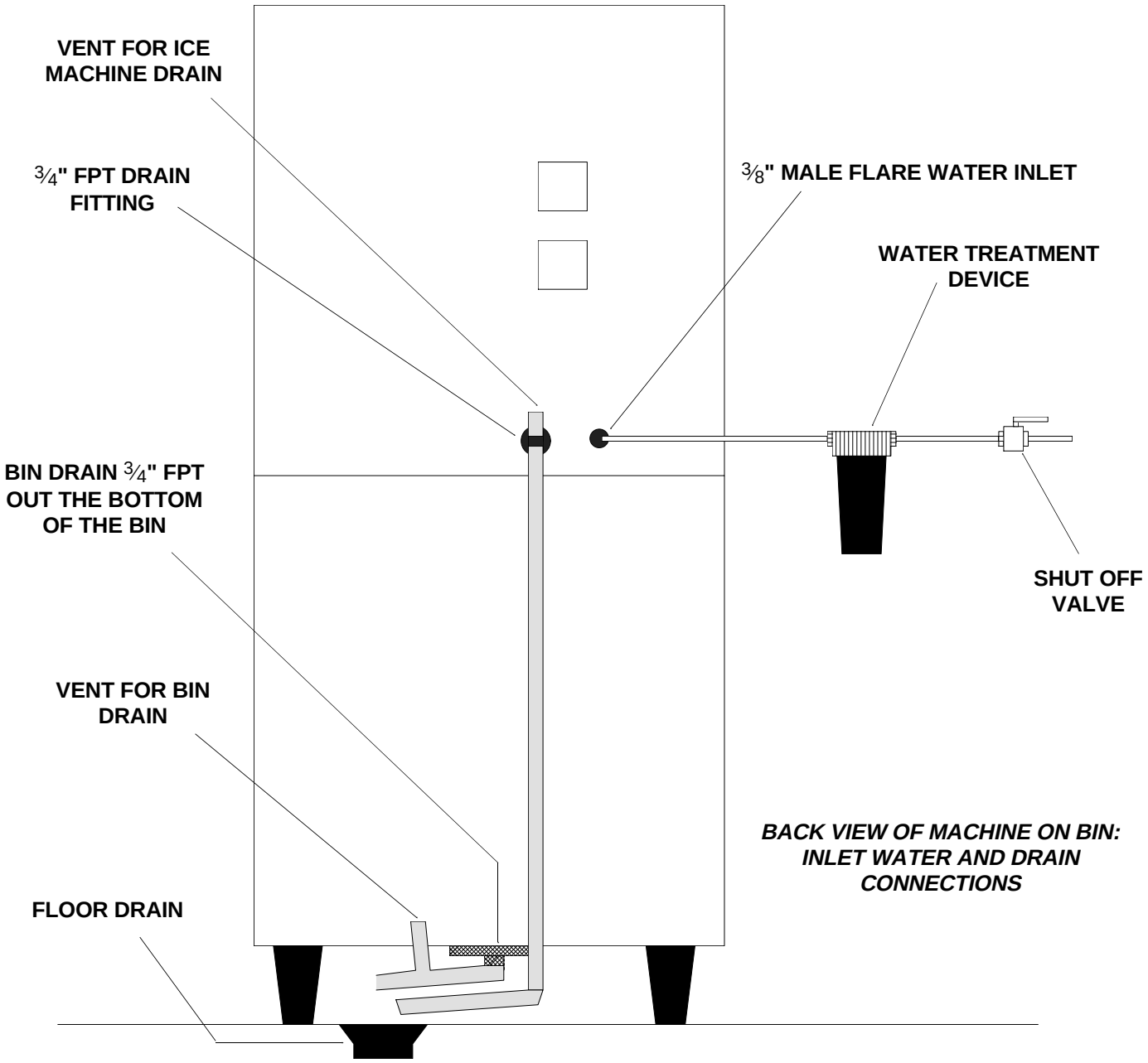

BACK VIEW OF MACHINE ON BIN: INLET WATER AND DRAIN CONNECTIONS

FOR THE INSTALLER: Coupling Instructions

CAUTION

The couplings on the sets of precharged lines are self sealing when installed properly. Carefully follow the instructions:

1. Remove the protector caps and plugs. Wipe the seats and threaded surfaces with a clean cloth to be certain that no foreign matter remains on them.

2. Lubricate the inside of the couplings, especially the O-Rings with refrigerant oil.

- The 3/8 inch liquid line (schrader valve end) goes to the remote condenser fitting marked “liquid line”.
- The other end of the liquid line goes to the ice maker fitting marked “liquid line.”
- The 1/2 inch discharge line (schrader valve end) goes to the remote condenser fitting marked “discharge line”.
- The other end of the discharge line goes to the ice maker fitting marked “discharge line”.

3. Begin tightening the couplings together by hand, then using two wrenches (it is important that ONLY the nut on the precharged lines be turned, the other parts of the couplings must NOT be allowed to turn or the process will tear out the diaphragms and they will be loose in the refrigeration system) tighten the coupling until it bottoms out or a definite increase in resistance is felt.

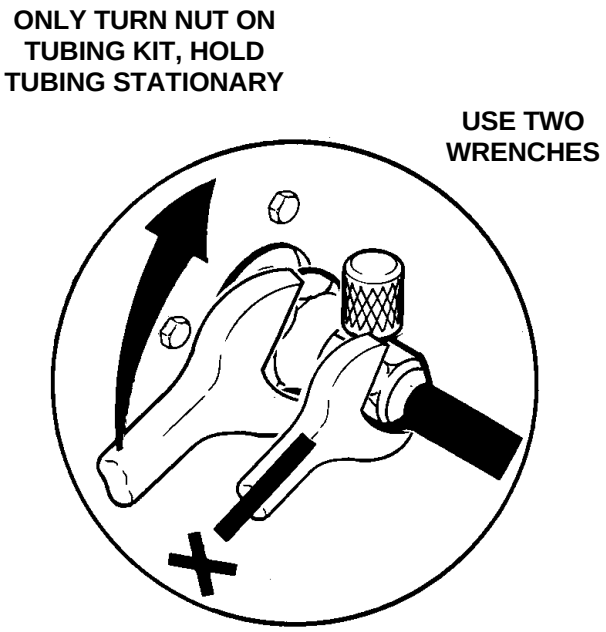

4. Using a marker or pen, mark a line lengthwise from the coupling union nut to the bulkhead. Then tighten the coupling and additional 1/4 turn. As the nut turns, the line will show when 1/4 turn is made.

5. After all connections are made, and after the king valve has been opened, check the couplings for leaks.

CME865R & CME1002R

FOR THE ELECTRICIAN: Electrical Connections

See the NAMEPLATE for current requirements to determine wire size to be used for electrical hookup. The cuber requires a solid chassis to chassis earth ground wire. See Wiring Diagram.

Be certain the cuber is connected to its own electrical circuit and individually fused. Voltage variation should not exceed ten percent of the nameplate rating, even under starting conditions. Low voltages can cause erratic operation and may be responsible for serious damage to the ice maker.

Electrical connections are made at the rear of the ice maker, inside the junction box.

CAUTION

Do **not** switch the ice maker on at this time, make certain the master and compressor switches are OFF when power is connected to the ice maker. Power must be connected to the ice maker long enough in advance of start up to allow the crankcase heater to warm the compressor, usually about 12 hours.

Scotsman Condenser:

Separate electrical connections are made from the ice maker to the condenser, as there is line power interconnecting the ice maker to the condenser.

All external wiring should conform to the national, state and local electrical code requirements. Usually an electrical permit and services of a licensed electrician will be required.

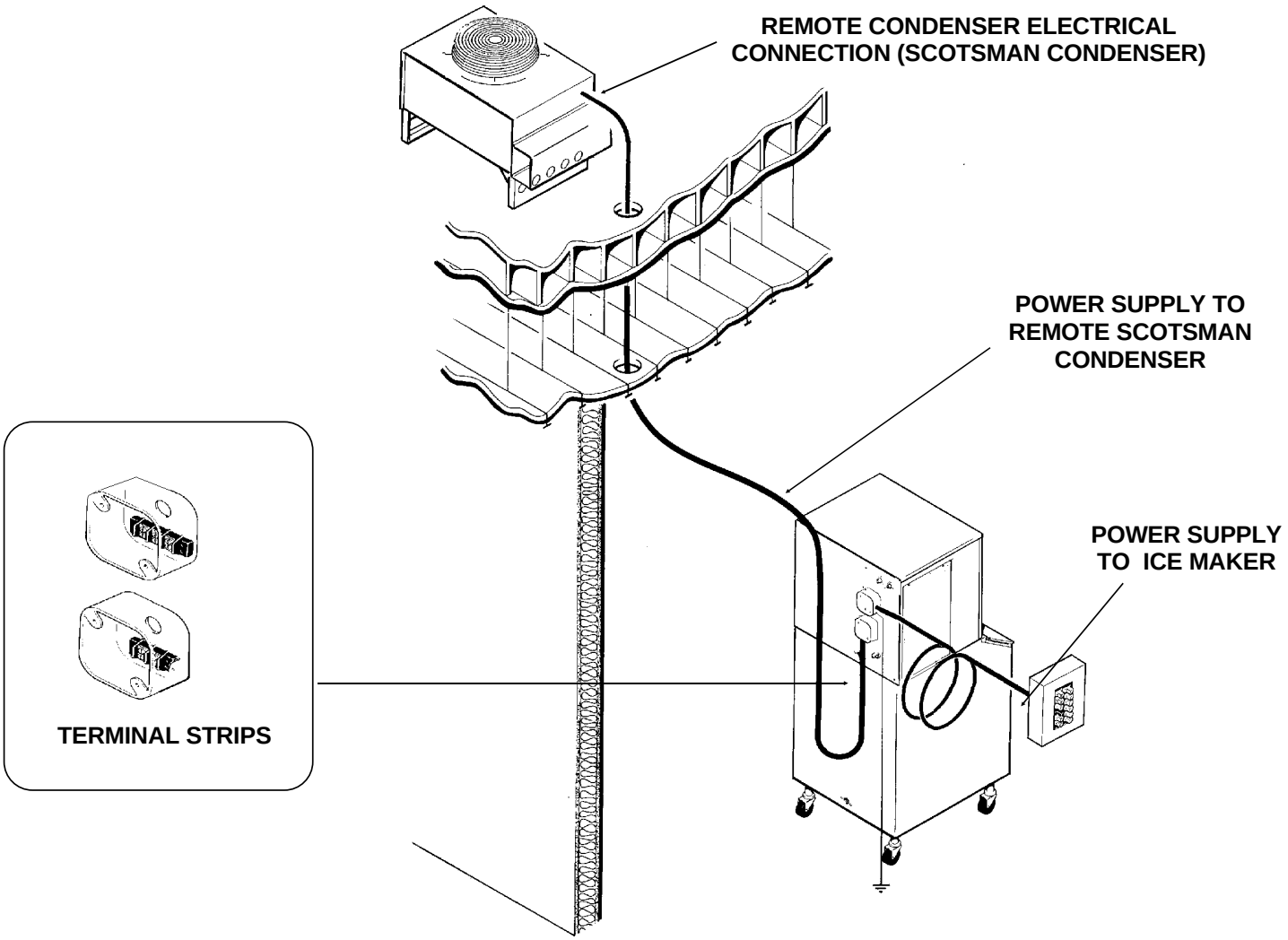

FOR THE INSTALLER: Final Check List

1. Is the ice maker cabinet in a room where ambient temperatures are within the minimum and maximum temperatures specified?

2. Is there clearance at both sides of the cabinet and at the back and top for service and utility connections?

3. Has water supply pressure been checked to insure a minimum of 20 PSIG and a maximum of 80 PSIG operating pressure?

4. Is the cabinet level?

5. Check that any shipping material has been removed from inside the cabinet.

6. Have all electrical and piping connections been made?

7. Are the On/Off/Wash and Compressor switches set to the OFF position?

8. Has power been connected to the ice maker?

9. Is the water supply line shut off valve installed?

10. Check all refrigerant lines and conduit lines, to guard against vibration or rubbing and possible failure.

11. Have the bin and cabinet been wiped clean and sanitized?

12. Has the Field Quality Audit form been properly filled out? Check for correct model and serial numbers from Serial nameplate, then mail the completed form to the SCOTSMAN factory.

13. Has the owner been given the name and telephone number of the authorized SCOTSMAN Service Agency serving him?

INITIAL START UP

14. Check CUBE SIZE

The dimensions of the cubes are fixed by the size and shape of the molds on the evaporator plate, except that the thickness of the cube MAY need to be adjusted at start up. There is only one size of cube that is correct; adjusting the cube size control to that size of cube will allow the ice maker to produce ice at its most efficient size. The correct size cubes will be fully formed at the edges; will harvest off of the evaporators beginning with individual cubes at the top of the evaporator, then vertical strips for the balance; and will appear similar to the illustration for “Correct Size Cube”.

Adjust for the correct size if needed:

To produce SMALLER sized ice cubes:

Locate cube size control knob, in the front of the control box. Rotate this knob one eighth of a turn counter clockwise. Observe size of the ice cubes in the next ice cube harvest and adjust again if needed, until the correct ice cube is achieved.

To produce LARGER ice cubes:

Locate cube size control on the front of the control box. Rotate the knob one eighth of a turn clockwise. Observe size of ice cubes in the next cube harvest and adjust again until correct the ice cube size is achieved.

15. Check harvest time. The machine must harvest all of the cubes before returning to a freeze cycle.

Increase the harvest time if there is less than 15 seconds of harvest time after the last cube has fallen into the bin.

Decrease the harvest time if there is much more than 15 seconds of harvest time after the last cube has fallen into the bin. Note: Harvest time is dependent upon the water and air temperatures at the ice machine. Do not adjust harvest time too short, as this will cause a freeze up.

See the next page for detailed harvest time adjustment instructions.

16. Check ICE BIN LEVEL CONTROL

The amount of ice maintained in the bin is adjustable. The normal setting is “full”. If desired, the machine may be adjusted to shut off the machine when the bin is only partially full.

1. Open the bin door and locate on the bottom of the ice machine, the ice level sensor. It’s in a socket about 2" in diameter and located left of the evaporator plates.

2. When the machine is running, wait until near the end of a “harvest” cycle.

3. Hold a flat object about the size of this service manual over the ice level sensor socket.

4. The ice machine should turn off at the end of the harvest cycle.

5. Slowly lower the flat object straight down.

6. The ice machine will start again at the point where it will maintain the ice level.

17. Replace all panels.

CUBES (ACTUAL SIZE)

TOO THICK

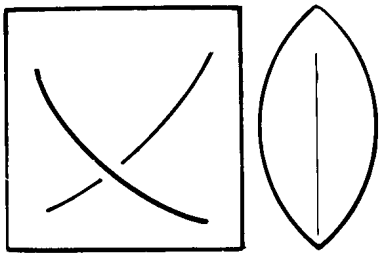

1 ¼"

CORRECT SIZE CUBE

1 ¼"

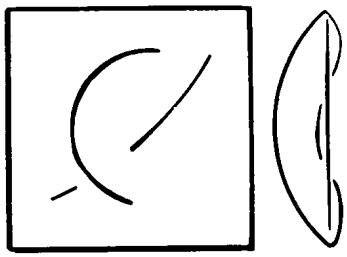

Note: Optimum performance will be achieved when the ice machine is adjusted to produce this size and shape of cube. The typical batch weight at this setting is between 8.25 and 9 pounds.

TOO THIN

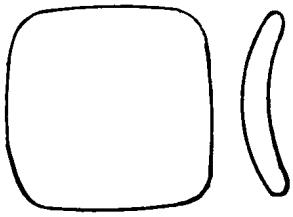

TIMER CAM POSITIONS

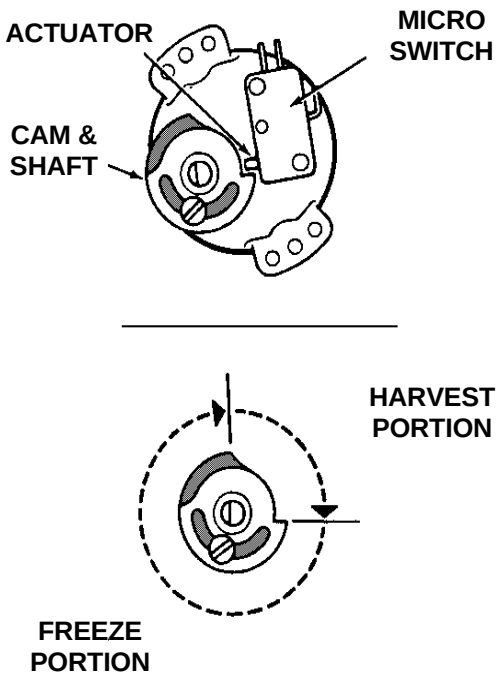

TIMER ADJUSTMENT

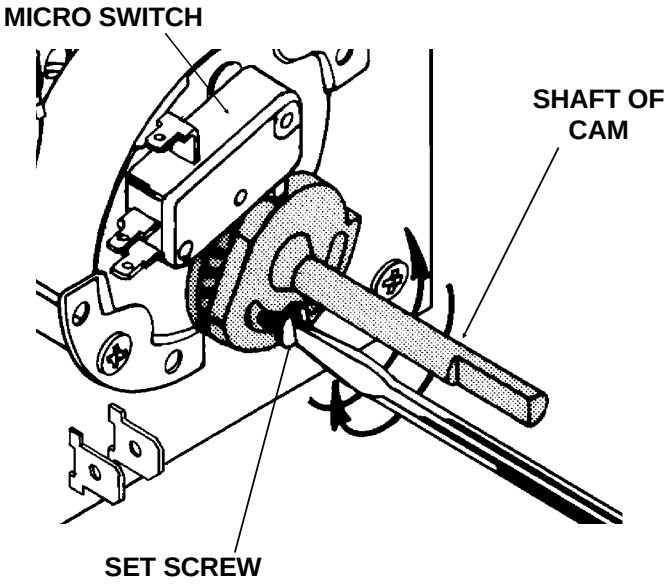

Adjustment Of The Timer & Switch Assembly

One complete revolution of the cam on the timer represents eight minutes. If left as factory set, four and one-half minutes comprise the freezing cycle portion during cam rotation, and the final three and one-half minutes is the defrost/harvest cycle. Rotating the shaft of the timer cam clockwise will put the ice machine in the freeze or harvest cycle.

⚠WARNING	Disconnect electrical power before beginning.

To adjust the timer & switch assembly:

1. Remove front panel.

2. Remove control box cover.

A. To start the HARVEST CYCLE: Slowly rotate the shaft of the timer and switch assembly clockwise until the actuator arm on the micro switch begins the harvest cycle.

B. To start the FREEZING CYCLE: Slowly rotate the shaft of the timer and switch assembly clockwise, until the actuator arm on the micro switch starts the freezing cycle.

C. To adjust the length of the harvest cycle:

1. Loosen the adjustment screw on the cam, and rotate the shaft of the cam to move the top part of the assembly. More of a gap between the high and low portions will yield more harvest time.

2. Tighten the set screw.

3. Replace the control box cover and front panel.

It. is important that the length of the harvest cycle allow enough time for all the ice cubes to fall from the evaporator. Too short of a time will cause the evaporator to freeze up and stop harvesting ice. Too much time wastes ice making capacity, energy and water. Adjustment of the harvest cycle may require an adjustment of the cube size control.

Adjust Bin Ice Level

1. Locate ice level control switch.

2. Move switch to the desired position.

3. To test, wait until the ice machine is near the end of a “harvest” cycle, if there is ice in the bin higher than the position the ice level control is set for, the ice machine will turn OFF at the end of the harvest cycle. If no ice in the bin, test again as described under, “To Test The Ice Level Setting”.

COMPONENT DESCRIPTION

Compressor Contactor

The compressor contactor carries the compressor line current. The contactor is wired so any control in the pilot circuit, such as the bin control, and high pressure controls, etc., will cause the contactor holding coil to be de energized, when the control contact OPENS, thereby breaking the circuit to the compressor.

Cube Size Control

This reverse acting (closes on temperature fall) thermostat determines how long the freezing cycle will be. The cube size control closes its contacts when the evaporator cools to the set temperature, starting the timer. A variation in heat load (either ambient air or incoming water temperature) will affect the efficiency of the refrigeration system, and that will vary the length of time it takes the evaporators to cool to the temperature at which the cube size control is set to close, which, in turn, will affect the overall cycle time. See CUBE SIZE ADJUSTMENT BEFORE attempting to adjust the control.

Relay

The multi-function, three pole, double throw, relay plugs into a socket on the printed circuit board in the control box. The relay functions in part to by-pass the bin control during the harvest and freeze cycles, preventing the ice maker from shutting off in the middle of a cycle. The bypass action allows only complete freeze and harvest cycles; the only time that the ice maker can shut off on bin control is as the end of the harvest cycle.

Timer - Timer & Switch Assembly

The timer begins to turn when activated by the cube size control. The outer surface, or large diameter lobe of the timer cam, determines the length of time for finish freezing of the ice cubes, while the inner surface, or small diameter lobe, determines length of the harvest cycle. The single-pole, double throw micro switch on the timer controls the power to the plug in relay coil, making it either the freezing or harvest cycle. The micro switch is actuated by a cam assembly directly connected to the timer motor. The timer cam can be adjusted to vary the defrost time, as required. One complete rotation of the cam will take eight minutes. Harvest is preset at 2 and a quarter minutes.

Hot Gas Solenoid Valve

The hot gas solenoid valve opens only during the harvest cycle. When it opens, it diverts the hot discharge gases so that they flow directly into the evaporator plates, by-passing the condenser and thermostatic expansion valve. The hot gases warm the evaporators, releasing the ice cubes from the ice cube molds. The hot gas solenoid valve is installed in a branch of the discharge line from the compressor, and when the timer switches the ice machine into the harvest cycle, the energized solenoid coil lifts the valve stem within the valve body, allowing the hot discharge gas to be diverted to the evaporators.

High Temperature Cut Out

This temperature sensor is located next to the hot gas valve, on the outlet side.

During normal operation, it does not affect the ice machine, but it will shut the machine off if the hot gas line overheats. It is an automatic reset.

COMPONENT DESCRIPTION

Ice Level Control

This electronic control uses sound waves to measure the distance between the bottom of the ice machine and the top of the ice in the bin. It is designed to control the machines ice production to maintain that distance.

The control is adjustable so that the ice machine will maintain a certain height of ice. It will not fill any closer to the ice machine than 8", and will not work if the distance to the bottom of the bin is greater than 8 feet.

Because it uses sound waves, a slight “ticking” sound can be heard coming from the bottom of the machine.

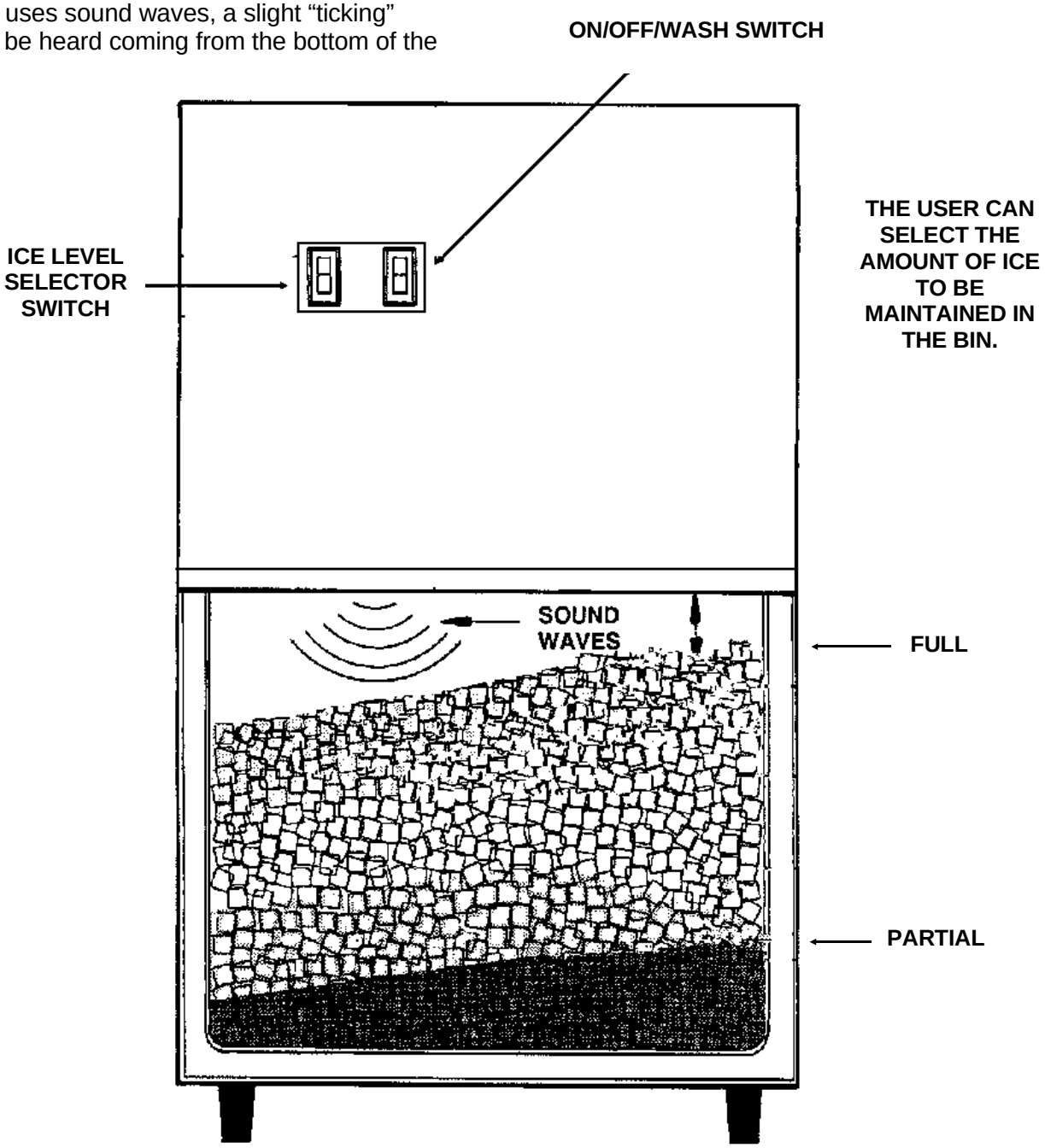

COMPONENT DESCRIPTION

Electric Water Inlet Valve

The water inlet solenoid valve fills the reservoir assembly with water. Excess water overflows out the overflow standpipe located at the back of the reservoir. This action fills and rinses the reservoir during each harvest cycle. The flow rate is .75 g.p.m.

Water Distribution System

The water distribution system evenly supplies water to all cells of the evaporator plates. The water pump pumps water from the reservoir up the vertical tygon tube to the tee. From there water is channeled through the water manifold to the water distributors, above each evaporator plate, and from six holes within each distributor, water flows to the cells of each side of the evaporator plates. Gravity flow returns the unfrozen excess portion of water to the reservoir for recirculation.

Reservoir

The reservoir, located below the evaporators, stores the inlet water charge, and collects the water that flows over the evaporator plates.

High Pressure Safety Control

This is a manual reset control that shuts down the ice maker, should the discharge pressure ever reach 450 PSIG.

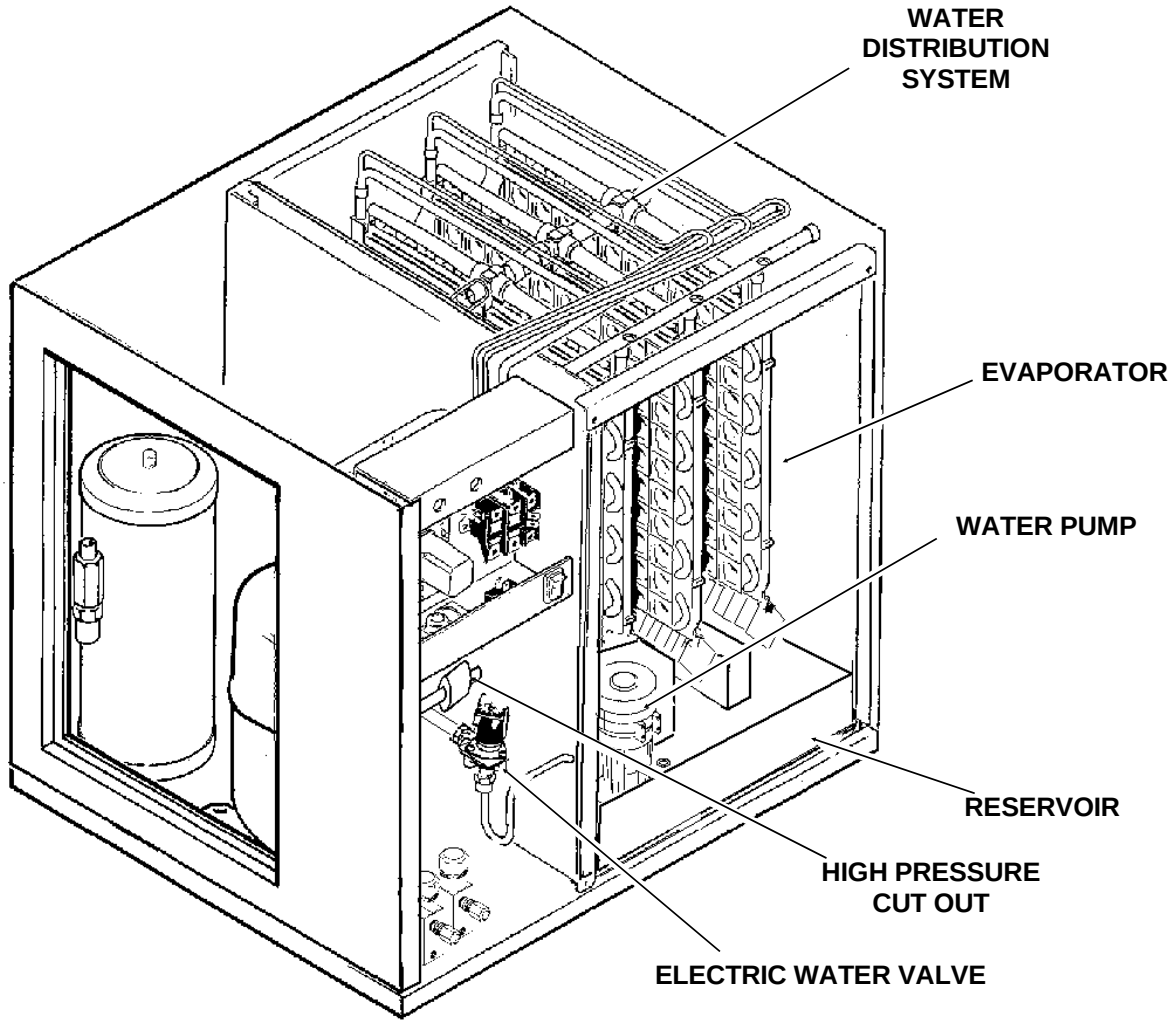

SERVICE SPECIFICATIONS: CME865R

The following numbers may be used as a guideline. There will be some variation from unit to unit. Numbers = (Condenser/Cabinet/Water).

	0/70/55	90/90/70	120/110/100
Typical Cycle Time	14 - 15 minutes	15 - 16 minutes	26 - 27 minutes
Harvest Time (2 ⅔ min. standard)	3 ¼ minutes needed	2 minutes	2 minutes
Typical Freeze Cycle Low Side Pressure (end of cycle)	26 PSIG	28 PSIG	35 PSIG
Typical Freeze Cycle Discharge Pressure (end of cycle)	210 PSIG	235 PSIG	330 PSIG
Typical Harvest Cycle Low Side Pressure (peak)	75 PSIG	100 PSIG	160 PSIG
Typical Harvest Cycle Discharge Pressure (min)	150 PSIG	200 PSIG	292 PSIG

Typical Total Amps

- 5 minutes into freeze: 8.4
- End of harvest: 11.8

Refrigerant Charge

- 288 oz of R-404A

High Pressure Cut Out

- 450

Typical Harvest Ice Weight

- 8.2 - 8.5 lb.

Pump Down Pressure Switch

- Closes at 35 PSIG
- Opens at 15 PSIG

Cube Size Control

- Cut In adjustable between 12.5^{o}F. and 24°F.

SERVICE SPECIFICATIONS: CME1002R

The following numbers may be used as a guideline. There will be some variation from unit to unit. Numbers = (Condenser/Cabinet/Water).

	0/70/55	90/90/70	120/110/100
Typical Cycle Time	13 - 14 minutes	14 - 15 minutes	25 - 26 minutes
Harvest Time (2 ⅔ min. standard)	3 ¼ minutes needed	2 minutes	2 minutes
Typical Freeze Cycle Low Side Pressure (end of cycle)	25 PSIG	24 PSIG	33 PSIG
Typical Freeze Cycle Discharge Pressure (end of cycle)	210 PSIG	240 PSIG	350 PSIG
Typical Harvest Cycle Low Side Pressure (peak)	84 PSIG	100 PSIG	150 PSIG
Typical Harvest Cycle Discharge Pressure (min)	170 PSIG	190 PSIG	270 PSIG

Typical Total Amps

- 5 minutes into freeze: 9.9
- End of harvest: 13.6

Refrigerant Charge

- 288 oz of R-404A

High Pressure Cut Out

- 450

Typical Harvest Ice Weight

- 8.2 - 8.5 lb.

Pump Down Pressure Switch

- Closes at 35 PSIG
- Opens at 15 PSIG

Cube Size Control

- Cut In adjustable between 12.5^{o}F. and 24°F.

A Scotsman Ice System represents a sizable investment of time and money in any company's business. In order to receive the best return for that investment, it MUST receive periodic maintenance.

Maintenance and Cleaning should be scheduled at a minimum of twice per year.

CLEANING: ICE MAKER

1. Remove front panel.
2. Switch the Wash/Off/Ice switch to OFF.
3. Remove the front liner.
4. Remove and discard all ice from the storage bin.
5. Locate the reservoir drain cap, remove the cap and drain the reservoir. Replace the drain cap. If the reservoir doesn't drain completely, disconnect the pump hose attached to the water distributors and place the end of the hose in a bucket. Switch the Wash/Off/Ice switch to Wash, and allow the pump to discharge the rest of the water. Reattach the hose to the water distributors.
6. Mix 8 ounces of Scotsman Ice Machine Cleaner with 1 gallon of warm (95^0F. - 115^0F.) water and pour into the reservoir until full.

⚠WARNING	**Scotsman Ice Machine Cleaner contains acids. These compounds may cause burns.**
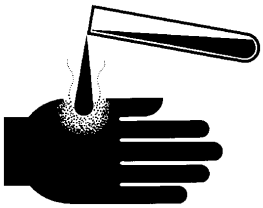	If swallowed, DO NOT induce vomiting. Give large amounts of water or milk. Call Physician immediately. In case of external contact, flush with water. KEEP OUT OF THE REACH OF CHILDREN.

7. Switch the Wash/Off/Ice switch to "wash". Let the unit operate for 30 minutes, then switch the unit off.
8. Drain the reservoir again (repeat step 5).
9. Switch the machine to "wash" and continue to add fresh water to flush residual cleaner from the system. Switch the Wash/Off/Ice switch off.
10. Sanitize the ice maker and bin, see "Sanitize Water System".
11. Replace the front liner.
12. Switch the Wash/Off/Ice switch back on.
13. Replace the front panel
14. Check the next batch of cubes to make sure all of the acid taste is gone.

CAUTION

DO NOT use ice produced from the cleaning solution. Be sure none remains in the bin.

15. Remove and discard all ice from the storage bin, pour hot water into the storage bin to melt the cubes and also clean out the bin drain.
16. The unit is now ready for continued automatic operation.

CLEANING

SANITIZE WATER SYSTEM

1. Remove and discard all ice from the bin.

2. Remove front panel.

3. Drain the reservoir

4. Prepare 2 gallons of an approved sanitizer solution in accordance with the instructions on the package.

5. Pour 1 gallon of the sanitizer into the ice maker reservoir.

6. Move the main switch to “Wash”, and allow the solution to circulate for a MINIMUM of 5 minutes.

7. Move the main switch to “Off”.

8. Pull out the drain plug and drain the reservoir.

9. Using a clean sponge and the remainder of the sanitizer solution, wipe the interior of the evaporator cover and the inside of the storage bin, taking care to wipe all surfaces that are normally in contact with ice.

10. Replace the evaporator cover. Replace the front panel.

11. Move the master switch to ON.

SCOTSMAN REMOTE CONDENSER

1. Disconnect electrical power at the ice maker.

⚠WARNING	Disconnect electrical power before beginning.

2. Wipe off any surface dust from the intake side of the condenser.

3. Vacuum the coil, or clean with coil cleaner.

4. The coil is clean when light can be seen through the fins.

5. Reconnect electrical power.

SANITIZE ICE STORAGE BIN

This procedure is to be done monthly

1. Remove and discard all ice from the bin.

2. Switch the ice maker off.

2. Prepare 2 gallons of an approved sanitizer solution in accordance with the instructions on the package.

3. Using a clean sponge wipe the inside of the storage bin and door, taking care to wipe all surfaces.

4. Rinse the interior of the storage bin using clean water and the sponge used in step 3.

5. Switch the ice machine back on.

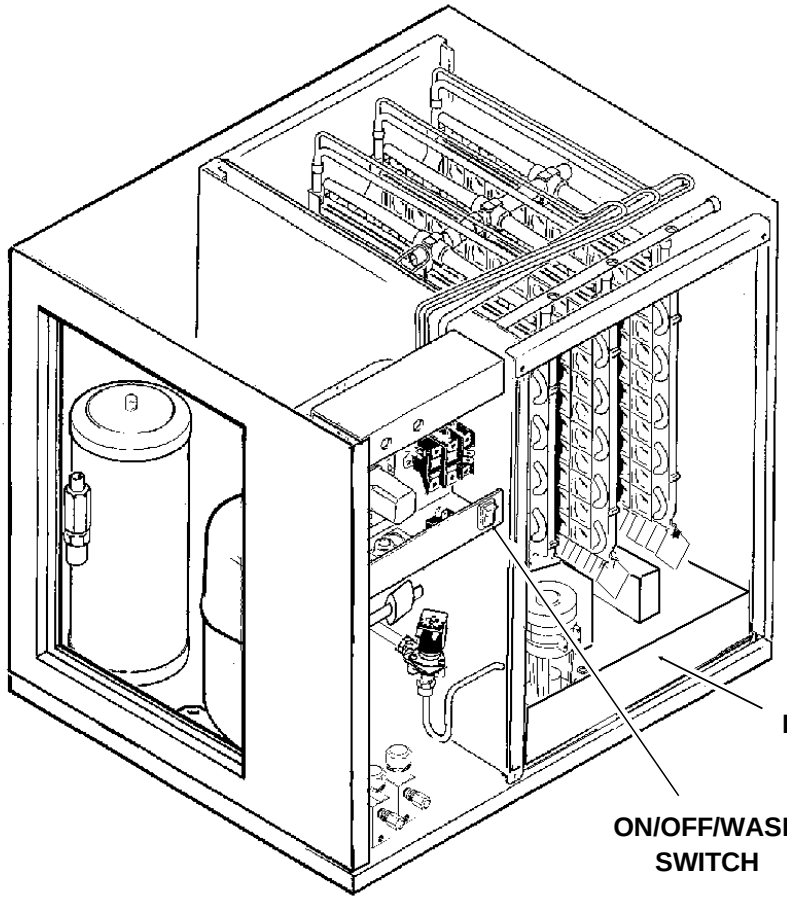

FREEZING CYCLE OPERATION

Water from the sump assembly is pumped to the water distributor system at the top of each evaporator plate. From the water distributor the water cascades by gravity over all cells of the plate and to the sump assembly below.

At the beginning of the freezing cycle the water pump, fan motor and compressor have power. The water pump operates continuously, through both the freezing cycle and the harvest cycle.

During the freezing cycle, the hot gas solenoid valve and the water inlet solenoid valve are CLOSED. When the ice cubes are partially formed, the cube size control will CLOSE. This will complete an electrical circuit to the timer motor. The timer will keep the ice maker operating in the freezing cycle for a selected length of time. This will give the ice cubes time to fully form. After that selected length of time, the timer will switch the ice maker into the harvest cycle, through the contacts of the timer assembly micro switch.

Low Temperature Freeze:

When the outside air temperature is low, the Head Pressure Regulator will close off the liquid line to the receiver, causing liquid refrigerant to back up into the condenser until the head pressure builds up to 220 PSIG. While this is occurring, the head pressure regulator passes discharge gas into the receiver to keep the refrigerant flowing.

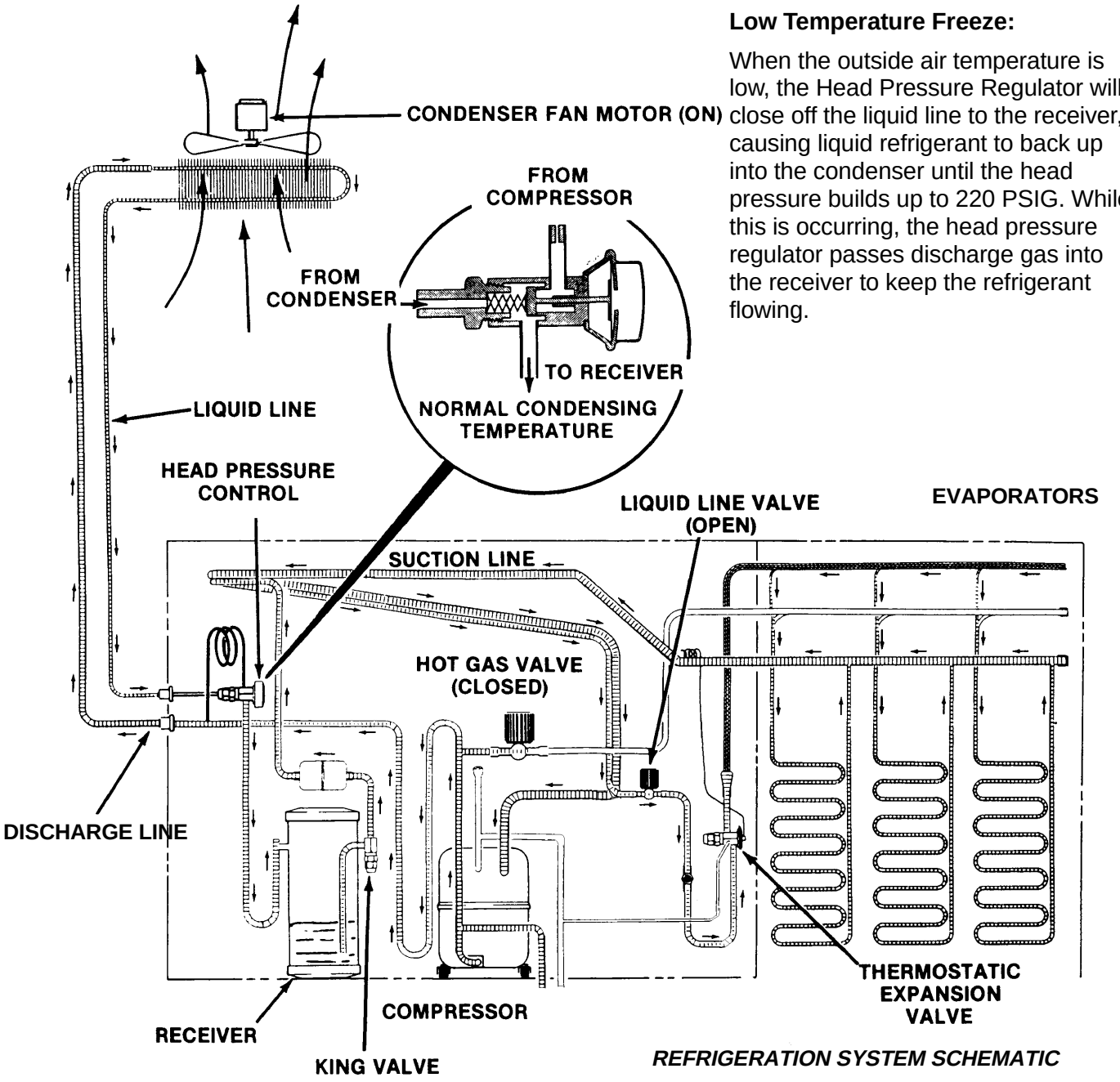

REFRIGERATION SYSTEM SCHEMATIC

HARVEST CYCLE - HOT GAS BYPASS

When the timer switches the ice maker into the harvest cycle, high pressure, high temperature refrigerant gas being discharged from the compressor is diverted from the condenser through the hot gas solenoid valve into each evaporator plate. During this cycle, the refrigerant bypasses the condenser. In the electrical circuit, both the compressor and the water pump are operating and the hot gas solenoid valve is energized and OPEN and the water inlet solenoid valve is OPEN.

The finished ice cubes are released from the sides of each evaporator plate by the warming effect of the hot gas condensing in each evaporator plate and the water cascading over the ice cubes. The released ice cubes drop into the ice storage bin below. At the end of the harvest cycle, the timer cam will push the actuator arm to the micro switch IN. If the ice level control is still CLOSED, a whole new cycle will begin. If the ice level control is OPEN, the ice maker will begin to shut OFF.

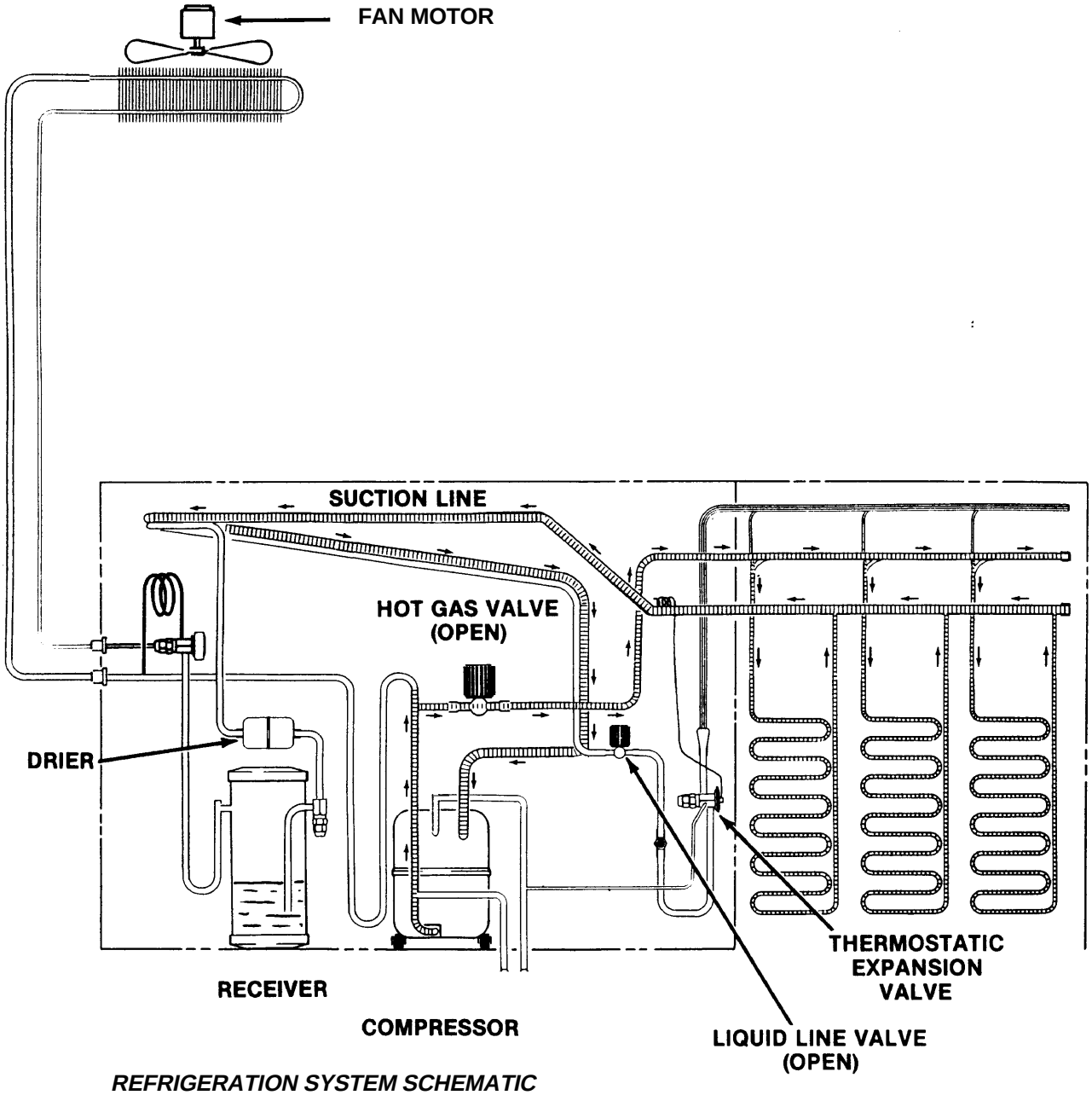

REFRIGERATION SYSTEM SCHEMATIC

SERVICE DIAGNOSIS

SYMPTOM	POSSIBLE CAUSE	**PROBABLE CORRECTION**
No ice, machine does not run	1. No electrical power	1. Restore power
	2. Circuit breaker tripped or fuse blown	2. Reset breaker or replace fuse, check for electrical fault.
	3. High pressure control open.	3. Reset HPC, check fan motor for proper operation, and condenser coil for dirt.
	4. Bin level control holding machine off	4. Check ice level control circuit. See page 25.
	5. High temp. cut out open	5. Hot gas valve leaks thru, replace hot gas valve
	6. Timer switch open	6. Replace timer
	7. On/Off switch open	7. Check or replace switch.
	8. Circuit board open	8. Replace circuit board.
No ice, compressor does not run, rest of ice machine does.	1. Compressor on/off switch open	1. Check or replace switch
	2. Open contactor coil	2. Replace contactor
	3. Liquid line valve does not open	3. Check electrical connections to liquid line valve, check coil, check valve operation
	4. Pump down pressure switch does not close	4. Defective switch, or liquid line valve does not open, or low on refrigerant; check/replace
	5. Thermostatic Expansion valve clogged or does not open.	5. Check/replace TXV.
No ice, no water over evaporators	1. Water pump does not pump	1. Check/replace water pump
	2. No water in reservoir	2. Check/replace water inlet valve.
No ice, everything runs	1. Too much heat load	1. Check for slow leak thru of water inlet valve.
	2. Low on refrigerant	2. Check pressures, if low find/repair leak. weigh in charge.
	3. Suction pressure too high	3. Defective compressor - replace
Low ice production	1. Too much heat load.	1. Check condenser air inlet and water temperatures.
	2. Compressor inefficient.	2. Replace compressor
	3. Non condensable gasses in refrigeration system.	3. Check head pressure, if very high, and no other reason is suspected, replace refrigerant charge.

SERVICE DIAGNOSIS

SYMPTOM	POSSIBLE CAUSE	PROBABLE CORRECTION
Low ice production	3. High head pressure, a result of a dirty condenser	3. Clean condenser, check fan motor
	4. Hot gas valve leaks thru	4. Replace hot gas valve
	5. High air temp. for condenser.	5. If possible, reduce condenser air inlet temperature.
No ice falling in bin, unit frozen up	1. Cube size control will not close	1. Check temp. of suction line, cube size control will not close if temp. too high. If temp. low enough, replace cube size control
	2. Timer motor open	2. Replace timer
	3. Plug in relay contacts open	3. Replace relay
	4. Not enough time during the harvest cycle to drop all ice	4. Adjust timer for more harvest time
	5. Cube size wrong	5. Adjust cube size
	6. Hot gas valve restricted.	6. Replace hot gas valve.
	7. Not enough water to help harvest.	7. Check for restriction of water supply.
	8. Head pressure too low	8. Check pressure control valve. Check for low refrigerant charge.
Ice maker stuck in harvest cycle	1. Relay coil open	1. Replace relay
	2. Timer stuck in harvest cycle	2. Check for power to timer motor, if power replace timer, if no power to timer motor, replace relay.
	3. Timer micro switch N.O. contacts will not close.	3. Replace timer.
Ice is mal-formed	1. Shortage of water	1. Check for restriction of water supply. Check for leak.
	2. Evaporator water passages restricted.	2. Clean ice maker.
	3. Cube size set wrong	3. Adjust cube size control
Water overflows from reservoir into bin.	1. Restricted sump drain	1. Repair drain
	2. Inlet water valve lets in too much water	2. Replace valve

SERVICE DIAGNOSIS: Ice Level Control Circuit

CONDITION	DETERMINE CAUSE	**PROBABLE CORRECTION**
Ice Machine does not run, it has power to it, the high pressure control is closed, the on/off switch is set to ON (the compressor will not operate until the liquid line valve opens, but the pump should be working if there is no ice in the bin).	A. Listen for a ticking sound from transducer.	If no noise, go to C. If there is a noise, check for a light on the board. If there is a light on, check relay contacts N.O. and COM. The contacts should be CLOSED. If closed, go to D. If not, replace the board. If light is off, or prior model, go to B.
	B. Open bin door and twist transducer 1/4 turn and pull out. **DO NOT UNPLUG with power connected**. Examine the transducer, the inside must be clean and dry.	If the inside of the transducer (above screen) was wet, replace it. Set bin level to FULL and aim at an object about 1-3 feet away. Machine should restart, if not go to D.
	C. **Check power to bin level control board.**	Should be 12 volts from transformer, if not replace transformer. If there is power go to D.
	D. **Disconnect electrical power** and test ice machine circuit by attaching a jumper wire between bin thermostat posts on circuit board part no. 12-1912-01 (the circuit board with the timer on it). Reconnect power.	If machine does not start **go back to machine circuit.** If machine starts, disconnect electrical power, remove jumper wire and reconnect electrical power. Then go to E.
	E. Transducer or ice level board assembly defective.	Replace transducer. Set bin level to FULL and aim at an object about 1-3 feet away. Machine should restart. If this does not repair unit, replace the board.
Machine runs, makes ice, switches on and off, but ice level cannot be controlled.	Ice level switch may be defective.	Replace ice level switch

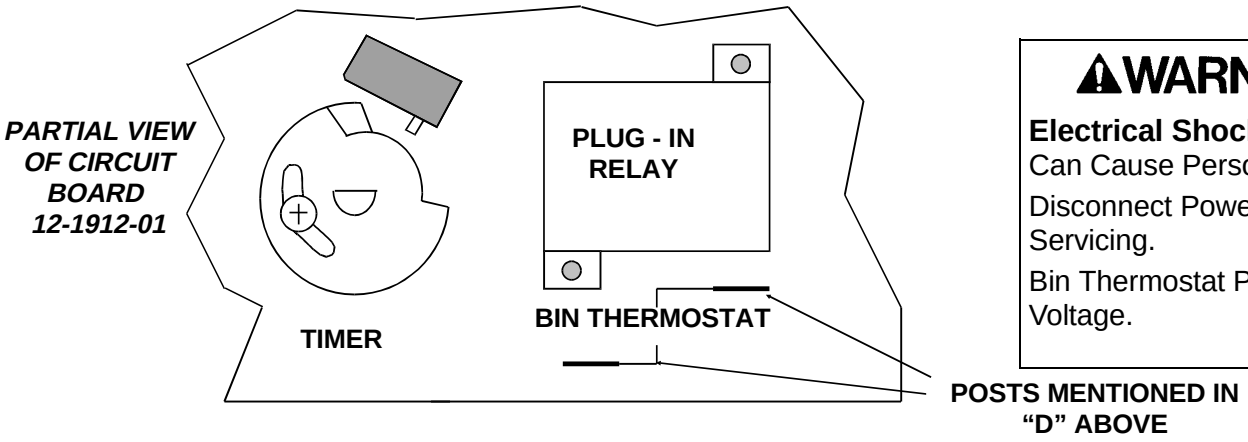

⚠WARNING

Electrical Shock Hazard

Can Cause Personal Injury.

Disconnect Power Before Servicing.

Bin Thermostat Posts at Line Voltage.

REMOVAL AND REPLACEMENT

TRANSDUCER

1. Disconnect electrical power BEFORE removing transducer.
2. Open bin door and locate the transducer socket.
3. Twist inner portion of transducer counter-clockwise and push up gently.
4. Pull transducer down until plug connection is accessible.
5. Unplug transducer and remove from the machine.
6. Reverse steps 1-5 to reassemble.

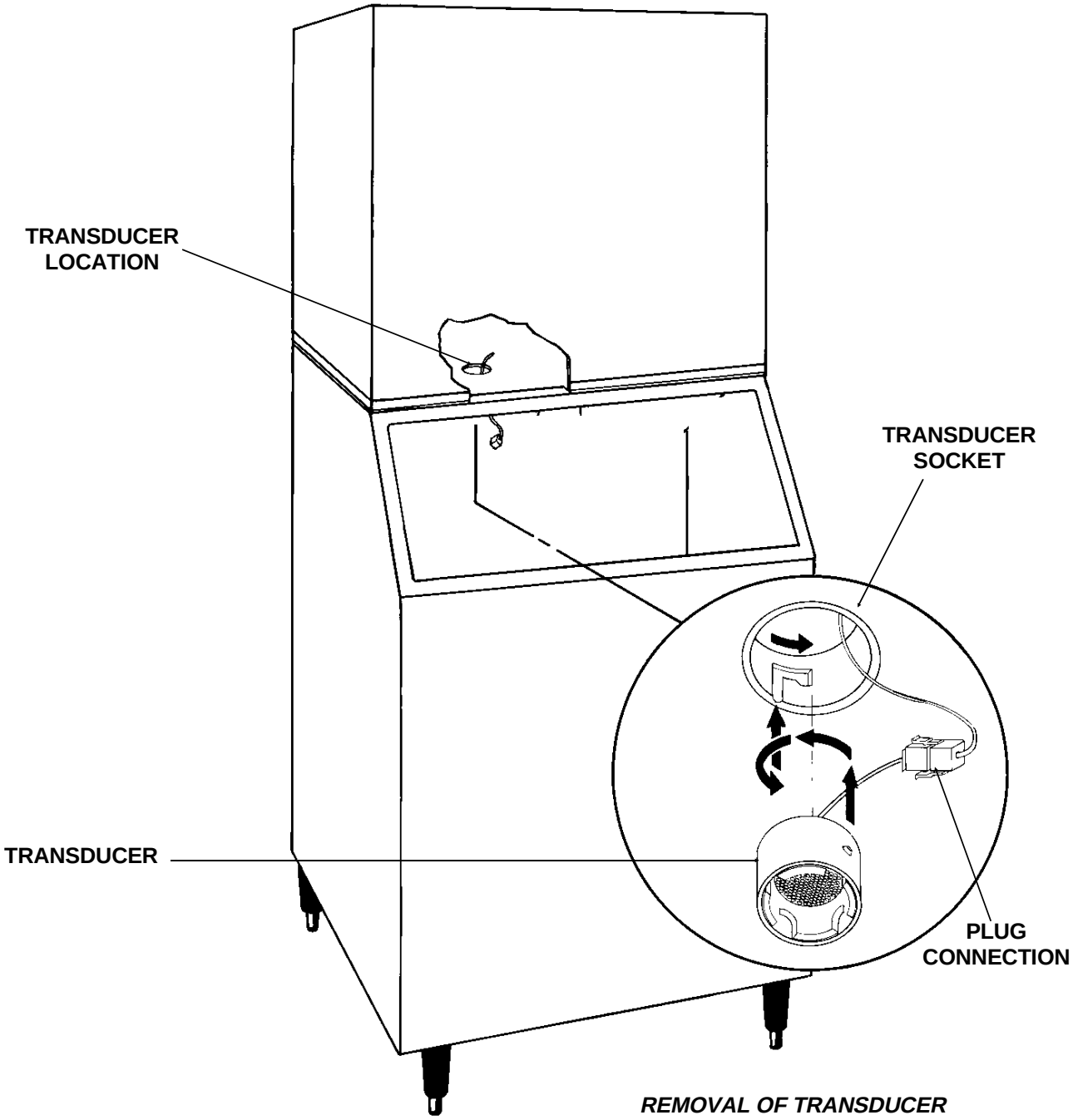

REMOVAL OF TRANSDUCER

⚠WARNING	Disconnect electrical power before beginning.

Water Distributor Tubes And Manifold Tubes

To remove the water distributor tube and manifold tube:

1. Pull out to unsnap catches and remove the front panel.

2. Remove the evaporator cover.

3. Slide the water distributor tube to the front about 1/8-inch along the top of the evaporator plate, until the water distributor tube can be unsnapped from the flexible notch and lifted upward to the right side.

4. Unsnap and disconnect water distributor tubes from the water manifold section. To replace the water distributor tubes and manifold tubes, reverse the removal procedure. BE SURE the notches in the water manifold tubes properly engage the alignment keys in the tee. BE SURE the water distributor tube is securely fastened at the notch at both sides of the evaporator plate. Check identical attachment for the left water distributor tube and notch; also, that the distributor/manifold connections at the top center of each evaporator plate is snug against the top of the plate.

Cube Size Control

To remove the cube size control:

1. Remove front panel.

2. Remove cover from control box.

3. Trace capillary tube, from the cube size control to the refrigerant suction line.

4. Remove the coiled capillary tube bulb from the tube well on the suction line.

5. Remove electrical leads from the cube size control.

6. Remove screws and the cube size control. To replace the cube size control, reverse the removal procedure. Be certain that the bulb is re-insulated.

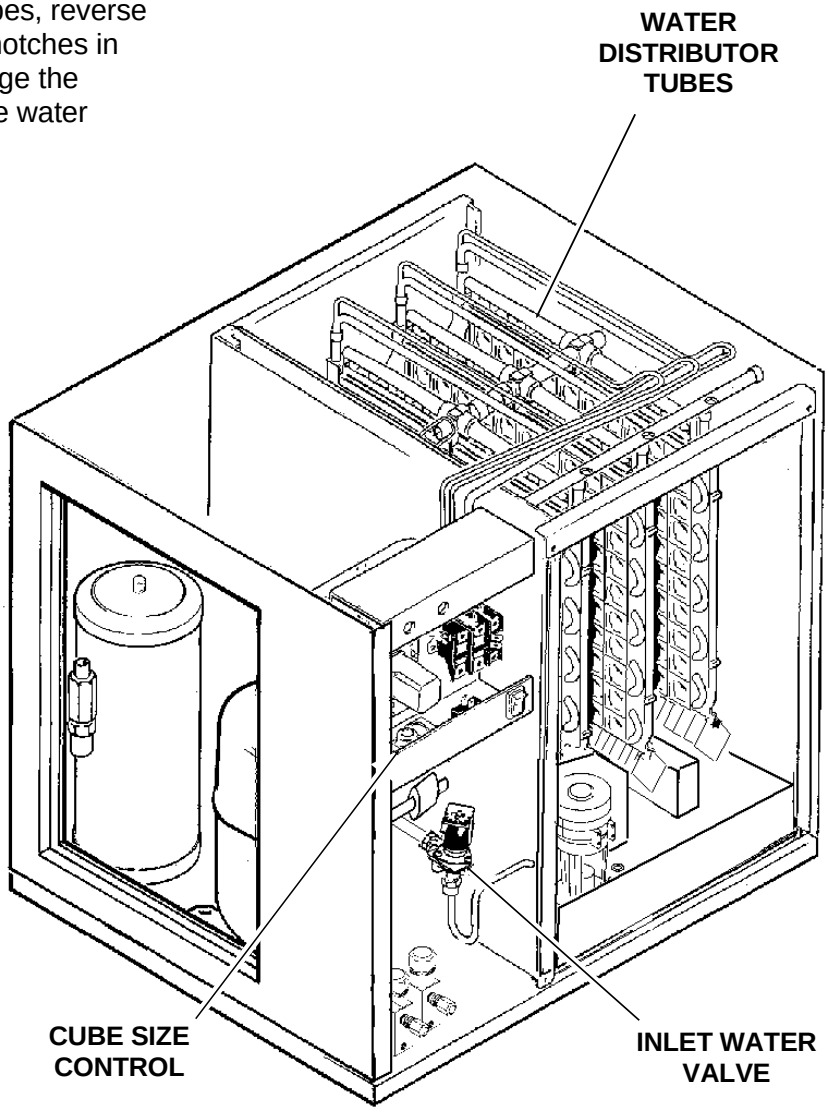

REMOVAL AND REPLACEMENT

⚠WARNING	Disconnect electrical power before beginning.

Water Pump

1. Remove front panel.
2. Remove evaporator cover.
3. Unplug water pump electrical connection.

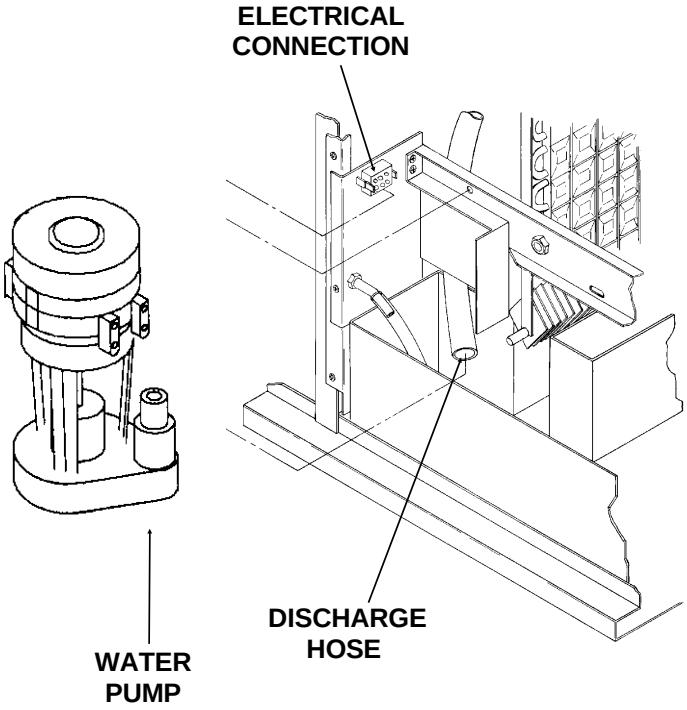

REMOVAL OF THE WATER PUMP

4. Remove thumb screw retaining pump to cross brace.
5. Pull pump partially out of reservoir and remove discharge hose.
6. Remove the pump from the ice maker.
7. Reverse to reassemble.
8. Replace all panels.
9. Reconnect electrical power.

Inlet Water Solenoid Valve Assembly

To remove the inlet water solenoid valve assembly:

1. Shut OFF water supply to machine.
2. Loosen and remove outlet water line from the inlet water solenoid valve assembly.
3. Remove screws and pull the water solenoid valve out to gain access.

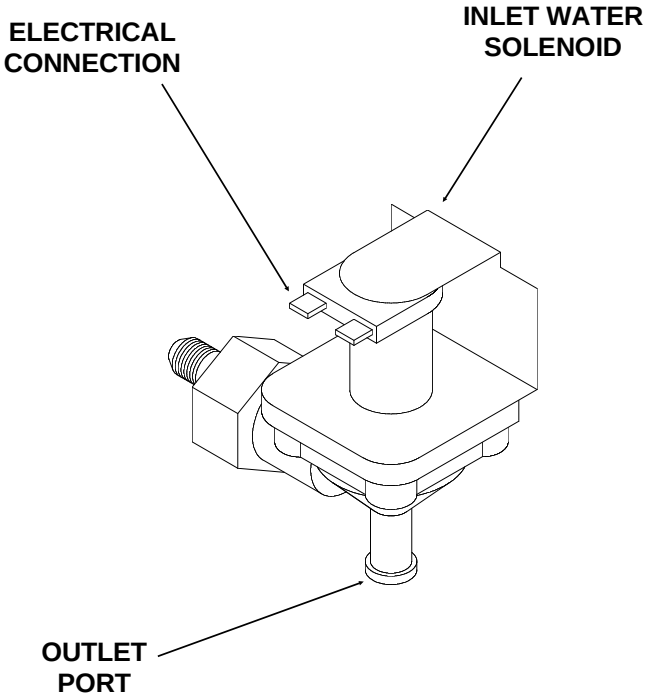

REMOVAL OF INLET WATER SOLENOID VALVE

4. Pull electrical cord from solenoid coil terminals.
5. Remove inlet water fitting from the water solenoid valve. To replace the inlet water valve assembly, reverse the removal procedures.

Head Pressure Control Valve

1. Remove side service panel, and top panel if possible.

2. Discharge and recover refrigerant from the system.

3. Break off the process tube on the dome of the head pressure control valve.

4. Cut out or unsweat the tubing connections to the valve. Remove the valve.

5. Wrap the new valve in wet cloths or other effective heat sink material, and sweat the tubing connections to the valve.

6. Weigh the nameplate charge into the receiver.

7. Replace all panels.

8. Reconnect electrical power.

Hot Gas Valve or Liquid Line Valve

1. Remove the side service panel, and top panel if possible.

2. Discharge and recover the refrigerant from the system.

3. Remove the electrical connections from the coil of the valve

4. Cut out or unsweat the valve at the tubing connections, remove the valve from the ice maker.

5. Install the new valve, wrap it in wet cloths or other efficient heat sink material.

6. Sweat the tubing connections to the valve.

7. Connect the electrical wires to the terminals of the valve coil.

8. Weigh the nameplate charge into the receiver.

9. Replace all panels removed for service.

10. Reconnect electrical power.

Thermostatic Expansion Valve

1. Remove the side service panel, and top panel if possible..

2. Discharge and recover the refrigerant from the system.

3. Locate the TXV sensing bulb on the suction line, unwrap the insulation and remove the bulb from the clamp.

4. Cut out or unsweat the old TXV from the tubing connections.

5. Wrap the new TXV body in wet cloths or other efficient heat sink material.

6. Re-attach the TXV bulb to the suction line in the same place as the original. Be certain to re-insulate the bulb.

7. Sweat in the new valve. Do not overheat.

8. Weigh the nameplate charge into the receiver.

9. Replace all panels removed for service.

10. Reconnect electrical power.

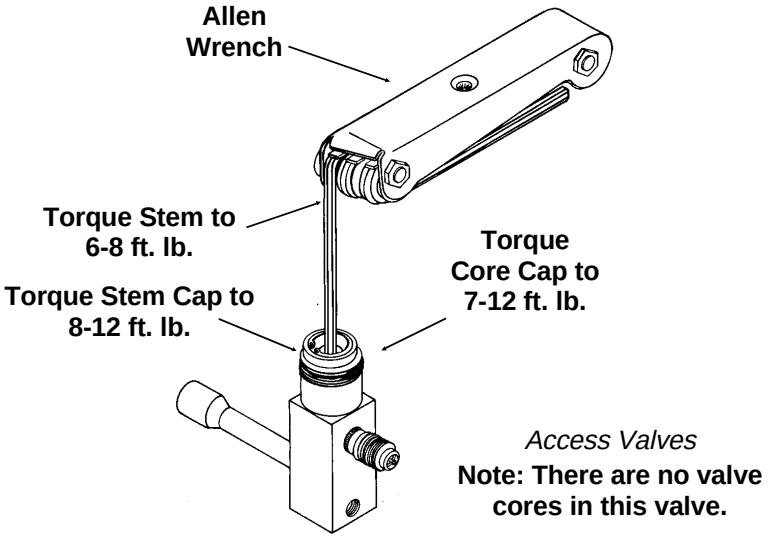

Access Valves

Note: There are no valve cores in this valve.

REFRIGERATION SERVICE

This ice machine uses R-404A refrigerant and polyolester oil. Do NOT use mineral oil in this refrigeration system.

- R-404A is a "Near Azeotrope" so liquid charging is required: See the next page.
- When the system is serviced, a special liquid line drier is required. It is included with replacement compressors.
- HP62 is not compatible with mineral oil, so these ice machines use Polyolester oil. Polyolester oil absorbs water very easily. When one of these refrigeration systems is opened for service, it must be re-sealed as soon as possible (15 minutes maximum).
- Special leak detection equipment is required to locate small refrigerant leaks. Usually a leak detector capable of detecting a Halongenated refrigerant or HFC-134A will work. Check with the leak detector manufacturer if in doubt.

Access Valves: To use the access valves:

- Remove the cap from the stem, use a 3/16" allen wrench to check that the valve is CLOSED. The remove the core cap.
- **Close the valve and replace the caps when the job is finished. The valve must be closed and the caps must be on or the valve will leak.**

General Information:

Work on the refrigeration system should only be done when it is certain that the system needs repair.

- **Refrain from checking refrigeration pressures without reason.** Visual inspection of the water system, observation of the ice formation, amp draw, voltage, and other techniques will lead to proper diagnosis.
- If gauges must be used, don't always check the high side pressure. If the condenser is clean and seems to be operating correctly, it most likely is.
- If gauges must be used, use very short hoses to minimize refrigerant discharged into the air.
- Refrigerant should not be added except as a way to determine the proper operation of the product. If the system was low on refrigerant, there is a leak, and it must be found and repaired.
- This system has a critical charge, it must be recharged with the correct amount of refrigerant as listed on the nameplate of the ice machine, or performance will suffer.
- Anytime the refrigeration system has been opened, the dryer should be replaced. **Note: Only a HFC type dryer can be used.**
- When brazing the tubing connections to components such as the TXV, the component must be protected by heat sink material.

Recover, reclaim or recycle refrigerant. The method chosen is up to the service company. Any refrigerant placed into a Scotsman ice machine must meet ARI spec 700-88. Reclaim programs are available through most refrigerant wholesalers.

Pressure-Temperature Chart for HP62

TEMP. (DEG F)	VAPOR PRES. (PSIG)	TEMP. DEG F)	VAPOR PRESS. (PSIG)
-20	17	70	146
-18	18	72	150
-16	20	74	155
-14	21	76	161
-12	23	78	166
-10	24	80	171
-8	26	82	177
-6	28	84	182
-4	29	86	188
-2	31	88	194
0	33	90	200
2	35	92	206
4	37	94	212
6	39	96	219
8	41	98	225
10	43	100	232
12	46	102	239
14	48	104	246
16	50	106	253
18	53	108	260
20	55	110	268
22	58	112	275
24	60	114	283
26	63	116	291
28	66	118	299
30	69	120	307
32	72	122	316
34	75	124	324
36	78	126	333
38	81	128	342
40	85	130	351
42	88	132	360
44	91	134	370
46	95	136	379
48	99	138	389
50	102	140	399
52	106	142	409
54	110	144	420
56	114	146	430
58	118	148	441
60	123	150	452
62	127	152	464
64	132	154	475
66	136	156	487
68	141	158	499

CME865R & CME1002R
LIQUID CHARGING

Instructions for R-404A

In preparation for charging, the low side hose should have a sight glass, and/or a restrictor device (such as a "Charge Faster") installed in it for metering liquid into the low side of the system.

*The discharge hose should be connected to the receiver's "king" valve for **faster** recovery and recharging.*

1. After a thorough evacuation to at least 200 microns, shut off the manifold valves and switch off the vacuum pump.

2. Place a drum of R-404A onto an electronic scale.

3. Attach the charging hose to the drum.

4. Open the valve on the drum and purge the charging hose.

5. Zero out the scale.

6. Shut the low side access valve at the ice machine.

7. Open the discharge manifold valve full open.

8. Watch the scale, when the correct charge is shown, shut the manifold valve.

Note: If all of the charge will not "go in" the discharge side:

A. Shut the discharge access valve at the ice machine.

B. Switch the machine on.

C. Open the low side access valve at the ice machine.

D. Open the low side manifold valve and observe the sight glass to be certain that only gas is flowing into the system.

E. When the proper charge is indicated on the scale, shut off the manifold valve(s).

9. Shut off the valve on the refrigerant drum.

10. Re-open the manifold valves until all liquid has flowed out of the hoses.

11. Shut the low side access valve on the ice machine.

12. Remove hoses from ice machine and replace all caps.

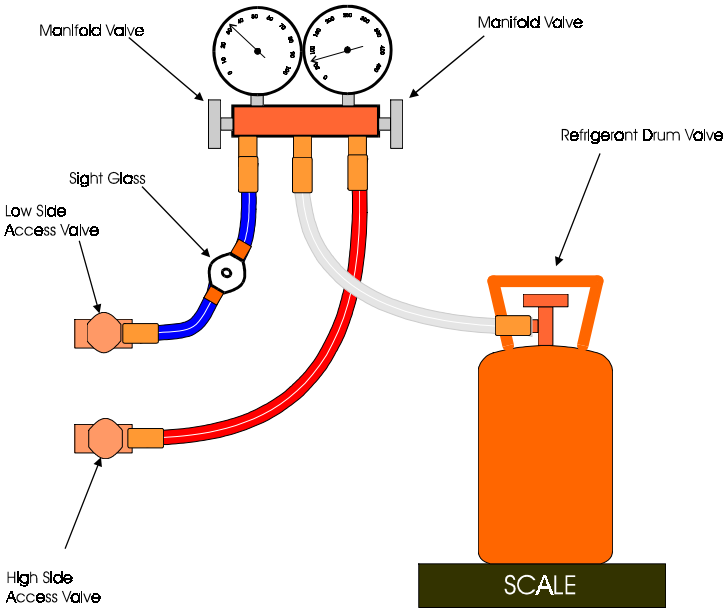

Hose Connection Schematic for Liquid Charging

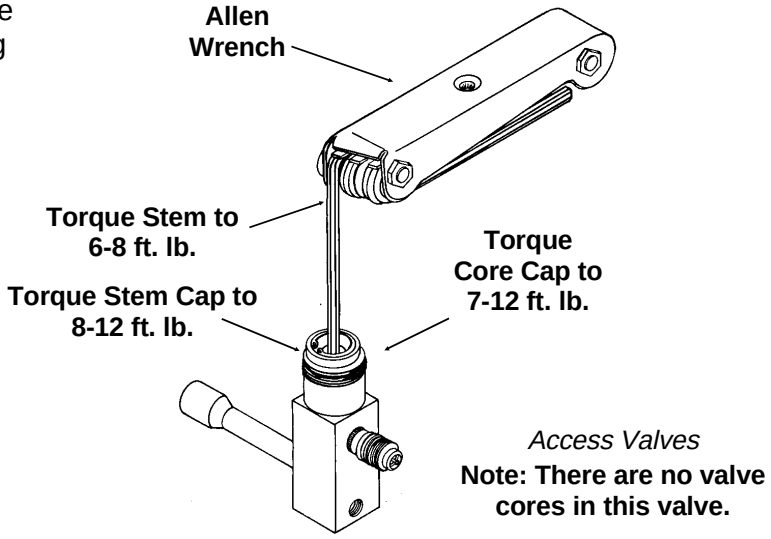

Access Valves

Note: There are no valve cores in this valve.